Product technical sheet

CASTILLO 3040-1

4 - 14 years

105 kids

76,5 m²





Material specification

- Powder galvanized and powder coated or stainless steel construction of 80 x 80 mm profile,
- Platforms and climbing walls made of durable anti-slip and waterproof HPL plate,
- Roofs and side panels made of durable HDPE plate, resistant to weather conditions,
- Transparent polycarbonate panels with a weather-resistant print,
- Covers made of hot-dip galvanized and powder coated steel mesh,
- Slides made of stainless steel with durable HDPE side panels,
- Tubular sled made of stainless steel,
- Stainless steel tube slide,
-
- Maze windows made of polycarbonate, balls made of synthetic material,
- Music panels made of durable HDPE and HPL plate, resistant to weather conditions,
- Durable climbing stones made of polyester resin composite with mineral fillers,
- Steel ropes in polypropylene braid, connected with durable plastic elements, stainless steel or aluminum,
- Attested, safe seats,
- Calibrated stainless steel chains, preventing fingers entrapment,
- Stainless steel bars, ladders and handrails,
- Stainless steel screws and/or screws covered with plastic caps,
- Safe end caps on top of the structure made of rubber or polypropylene,

Facilitating disability

shelters

Intellectual development

manipulation

music

thinking

Physical development

hiding

sliding

rest

climbing

crawling

roofs

Vinci Group Sp. z o.o.
Seminaryjna 9 Street
99-400 Łowicz

VAT: 534-250-14-46
PHONE: +48 42 203 24 99 ext. 26
M: +48 793 404 991

biuro@vinci-play.com
info@vinci-play.com
www.vinci-play.com

1 number of towers

3 number of slides

7 number of roofs

11 number of interactive elements

9 number of activity elements

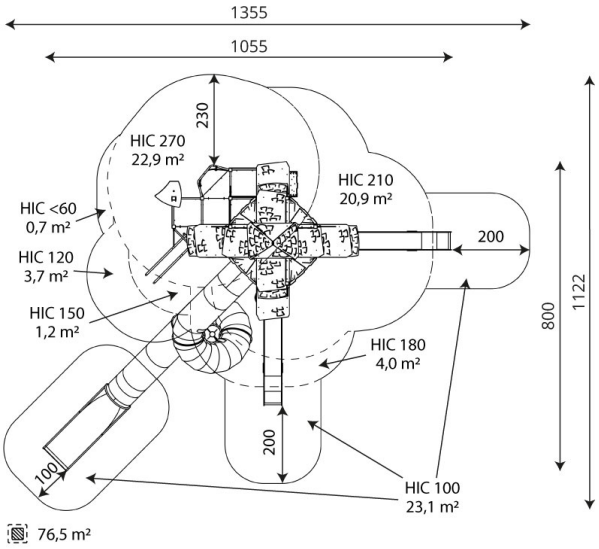

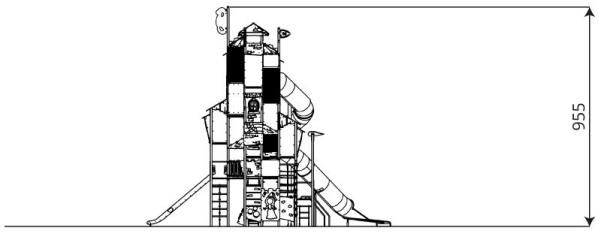

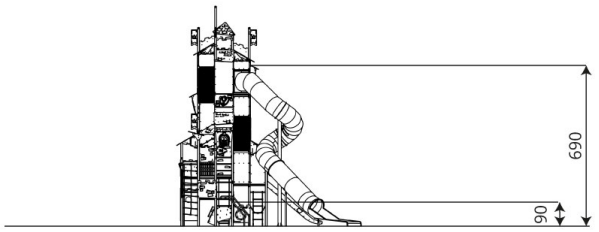

Product technical sheet

CASTILLO 3040-1

Product data

Length	1055 cm
Width	800 cm
Total height	955 cm
Age group	4 - 14 years
Number of users	105 kids
Safety zone	76,5 m2
Free fall height	270 cm
The height of the platforms	90, 120, 150, 180, 210, 270, 300, 330, 360, 420, 450, 480, 510, 540, 570, 600, 630, 690 cm
tube slide platform height	570 cm
slide platform height	180, 210 cm
In accordance with norm EN	1176-1:2017+A1:2023
Weight of the heaviest part	210 kg
Dimensions of the largest part	8x8x585 cm
Availability of spare parts	YES
Installation time	21 h
Color options	

Data is subject to change without prior notice.

Additional information

- equipment adapted for the disabled; intended for public playgrounds;
- equipment has a certificate issued by an accredited entity or a declaration of conformity;
- no sharp edges or chinks that would pose a danger of jamming the head, fingers or any other body parts;
- anchoring on flat surface, 80/70 cm deep;
- slide should not be installed southwards;
- render is for reference only, the actual appearance of the equipment and its color may vary;

Guarantee

30 30 year guarantee - Structural strength of steel and stainless steel components

15 15 year guarantee - Structural failure of steel and stainless steel, for dynamic equipment

10 10 year guarantee - Structural failure of high density polyethylene and high pressure laminates components

5 5 year guarantee - Corrosion of stainless steel and hot dip galvanized and powder coated components; against bark beetles and rot in case of wooden structural elements

Detailed information in the guarantee card

Vinci Group Sp. z o.o.
Seminaryjna 9 Street
99-400 Łowicz

VAT: 534-250-14-46
PHONE: +48 42 203 24 99 ext. 26
M: +48 793 404 991

biuro@vinci-play.com
info@vinci-play.com
www.vinci-play.com

Product technical sheet

CASTILLO 3040-1

Surfaces according to EN 1176-1:2017+A1:2023

	Description (mm)	Layer thickness (cm)	Maximum fall heights (cm)
Turf/ top layer of soil (A,B,C)	-	-	≤100
bark (A,C)	Particle size from 20 to 80	30	≤200
		40	≤300
woodchips (A,C)	Particle size from 5 to 30	30	≤200
		40	≤300
sand or gravel (A,C)	Particle size from 0,25 to 8	30	≤200
		40	≤300
synthetic attested (A,B,C)	Tested according to EN 1177		270

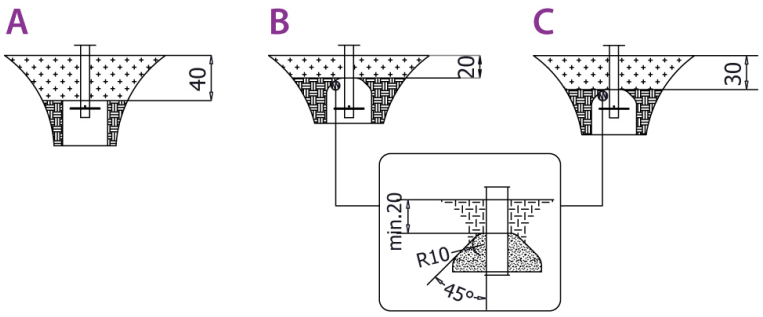

Amount of safe surface corresponding with free fall height:

HIC <60	0,7 m^2
HIC 100	23,1 m^2
HIC 120	3,7 m^2
HIC 150	1,2 m^2
HIC 180	4,0 m^2
HIC 210	20,9 m^2
HIC 270	22,9 m^2

Data is subject to change without prior notice.

Vinci Group Sp. z o.o.
Seminaryjna 9 Street
99-400 Łowicz

VAT: 534-250-14-46
PHONE: +48 42 203 24 99 ext. 26
M: +48 793 404 991

biuro@vinci-play.com
info@vinci-play.com
www.vinci-play.com