J2694

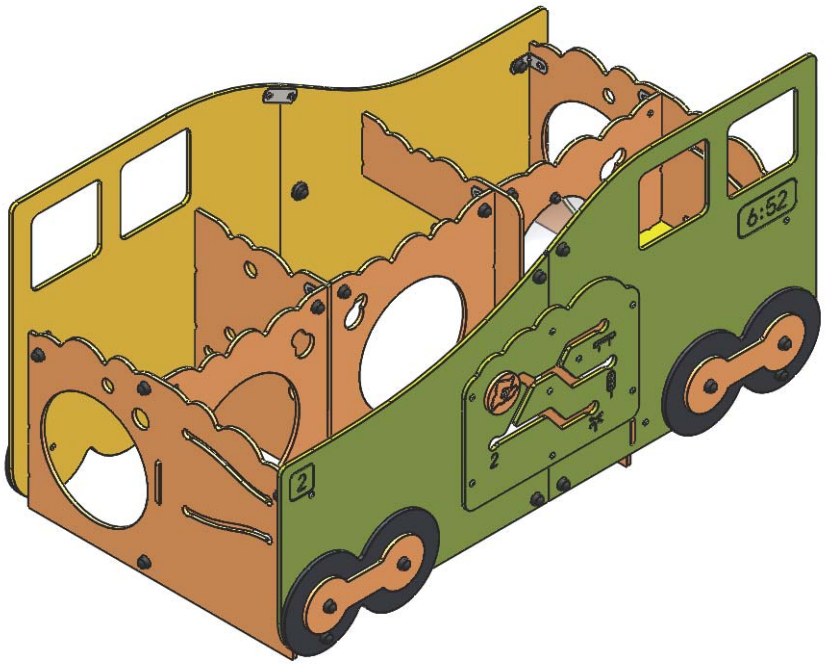

N°	x	m²
1	0.6 m	19 m²

Zone d'impact
Impact area
Area de impacto
Fallraum
Valzone

Espace libre
Free space
Espacio libre
Freiraum
Vrije ruimte

0 Point de référence
Setting out point
Punto de referencia
Bezugspunkt
Referentiepunt

EN1176-1:2017

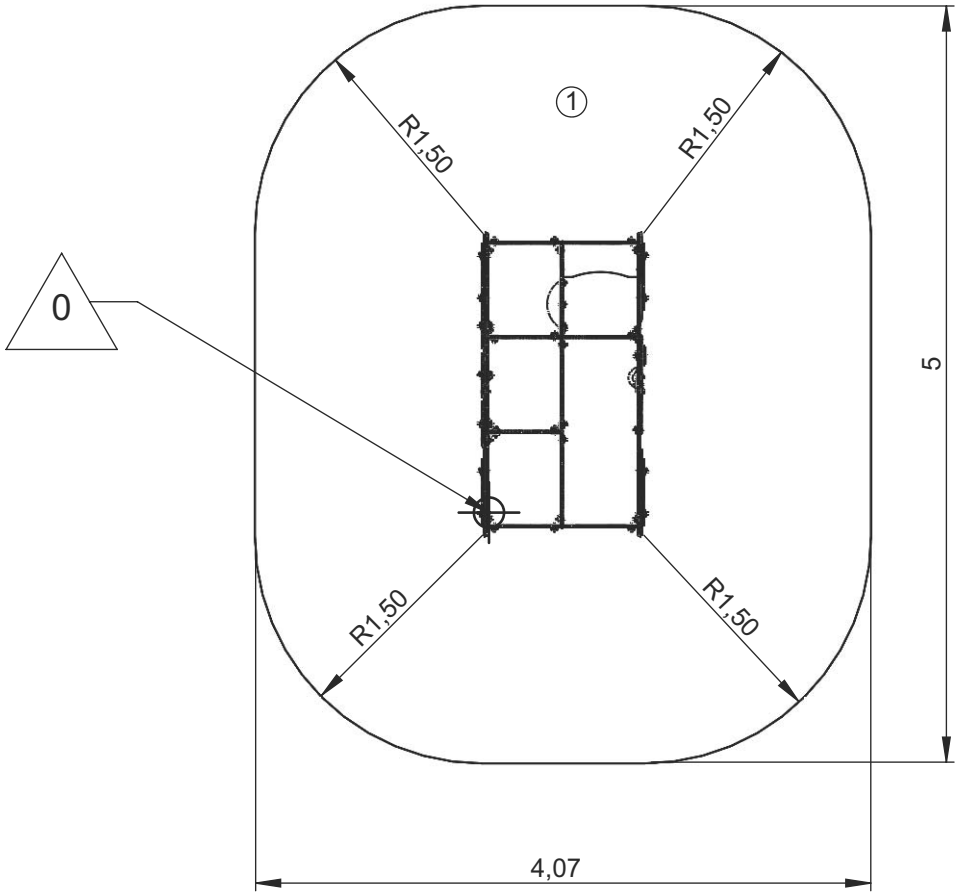

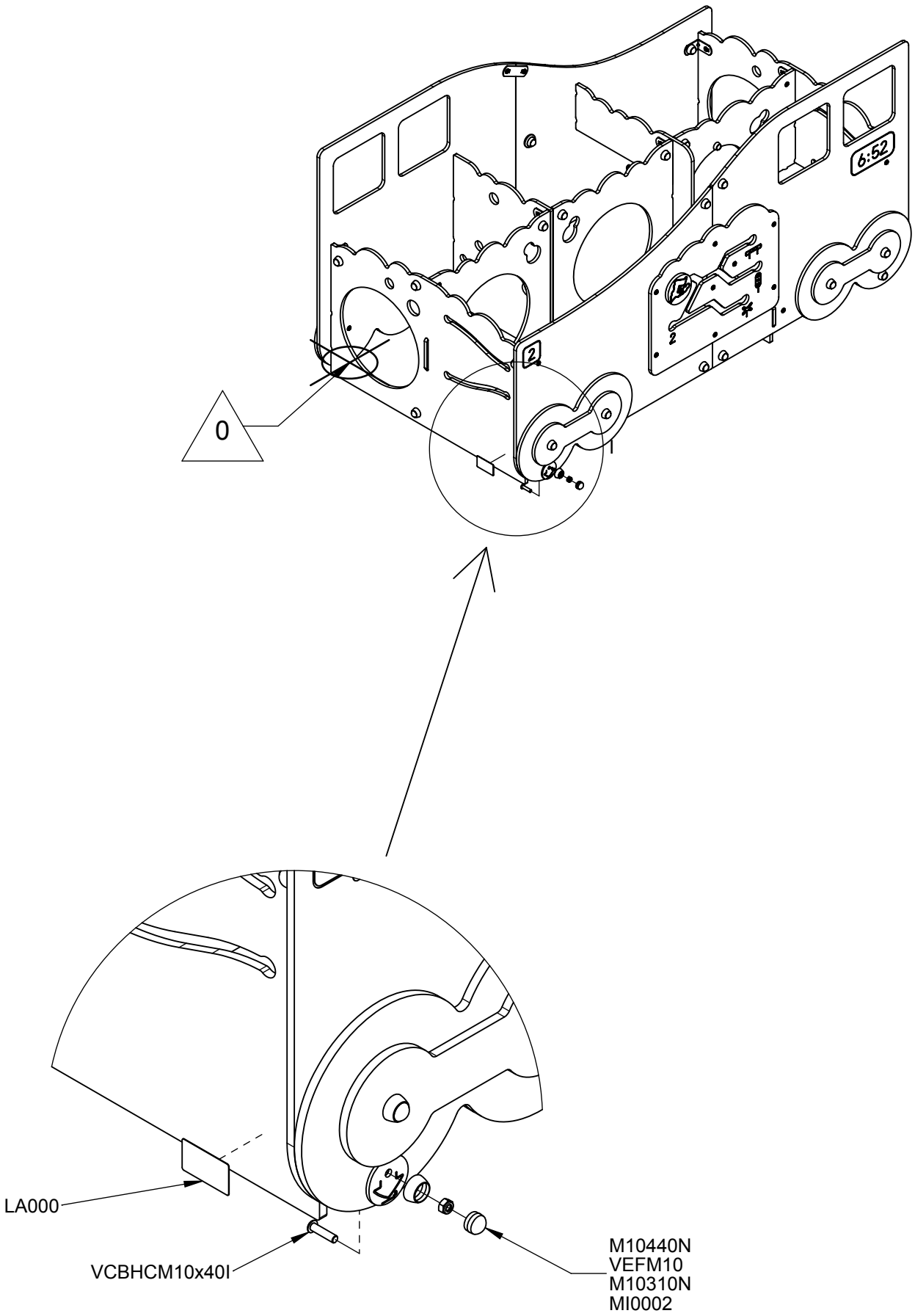
0
6:52
LA000
VCBHCM10x40I
M10440N
VEFM10
M10310N
MI0002

Zone d'impact
Impact area
Area de impacto
Fallraum
Valzone

19 m²

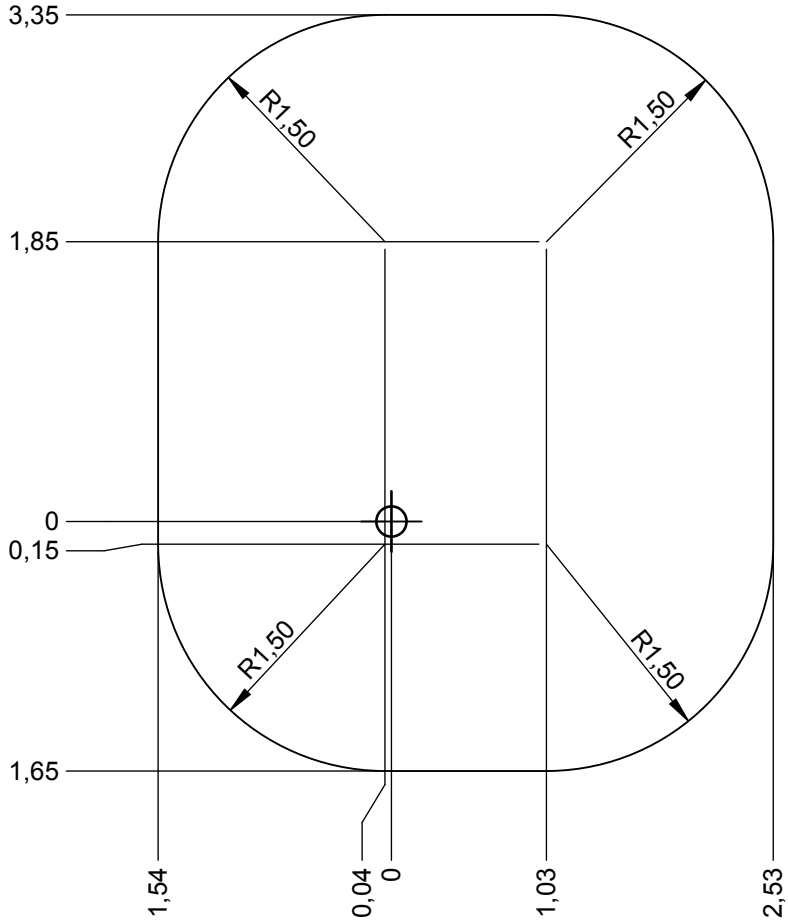

Sol souple
Wetpour
Caucho continuo
Synthetischer fallschutz
Gietvloer

19 m²

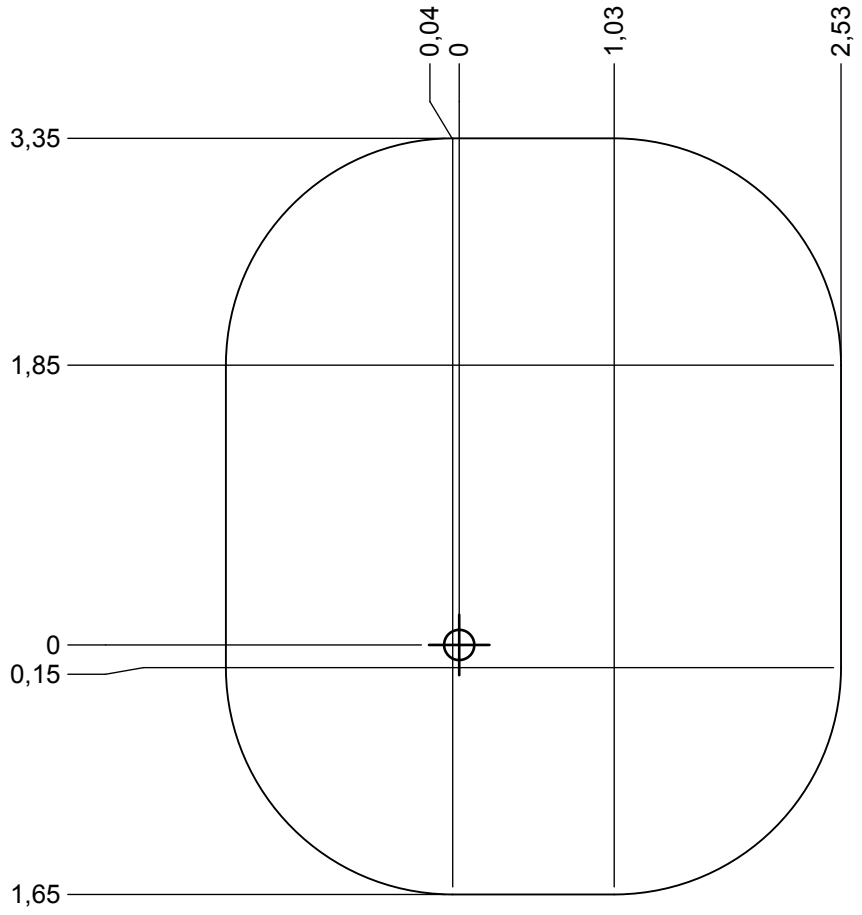

Dalle béton
Concrete pad
Solera de hormigon
Beton bodenplatte
Betonnen bodemplaat

19 m
21 m²

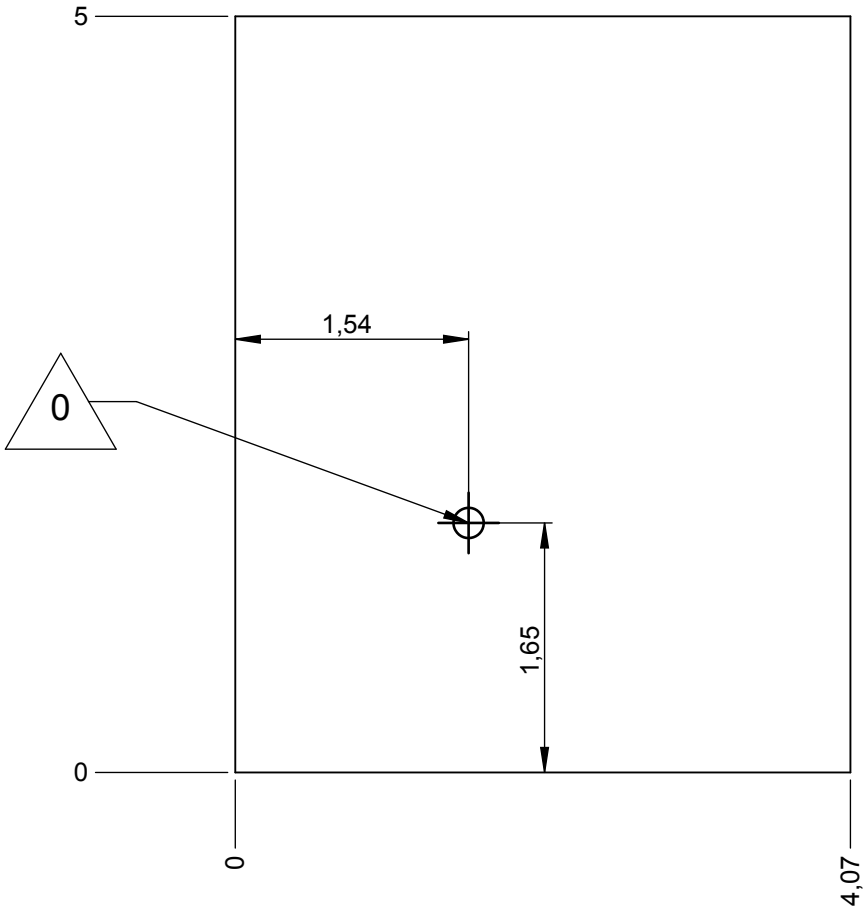

Sol fluent
Loos particule material
Arenero
Loses Bodenmaterial
Los bodemmateriaal

19 m
23 m²

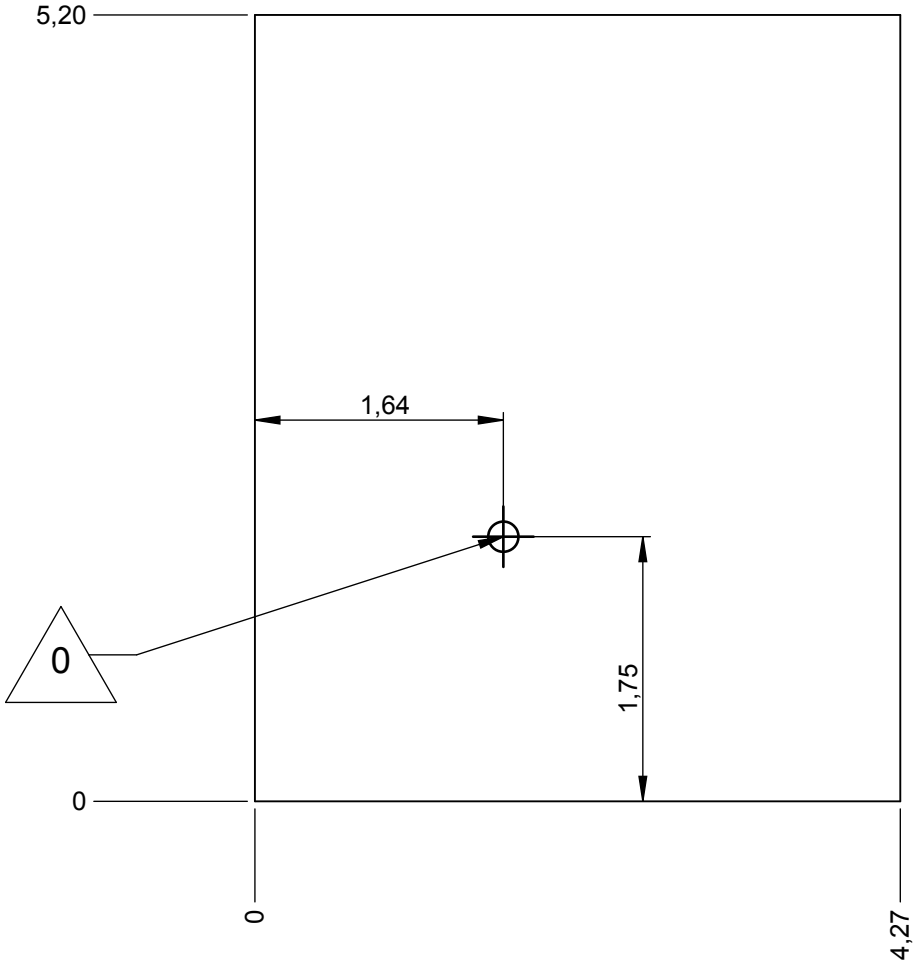

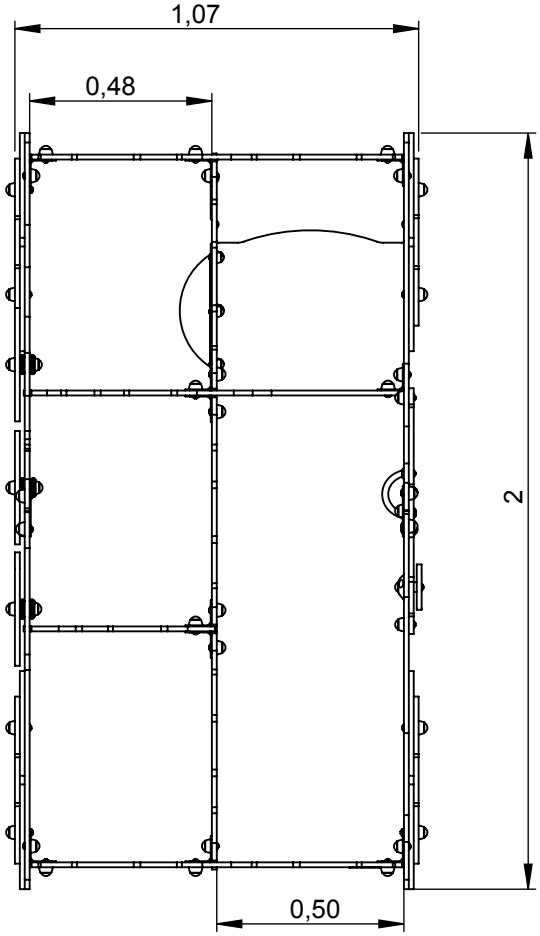
1,07
0,48
2
0,50

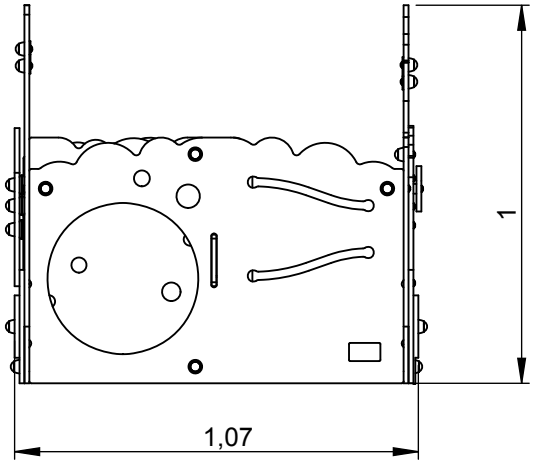
1
1,07

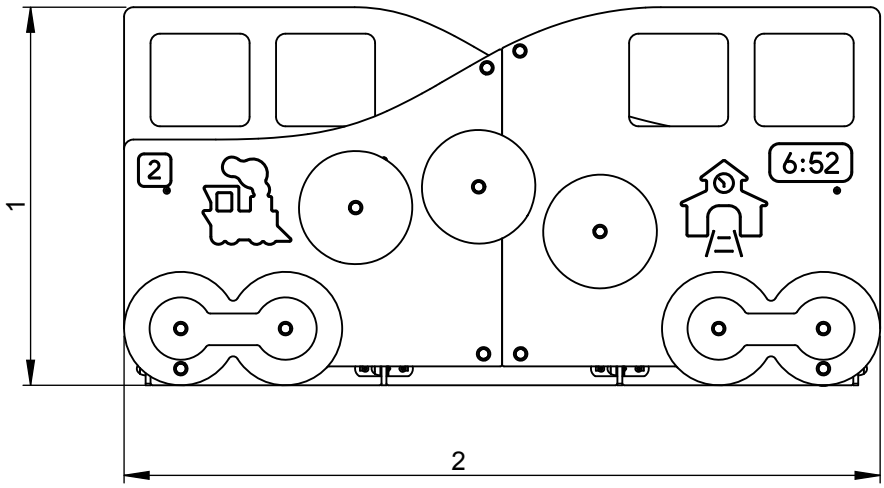
2
6:52
1
2

Implantation
Footing plan
Implantaciõn
Fundomentplan
Funderingstekening

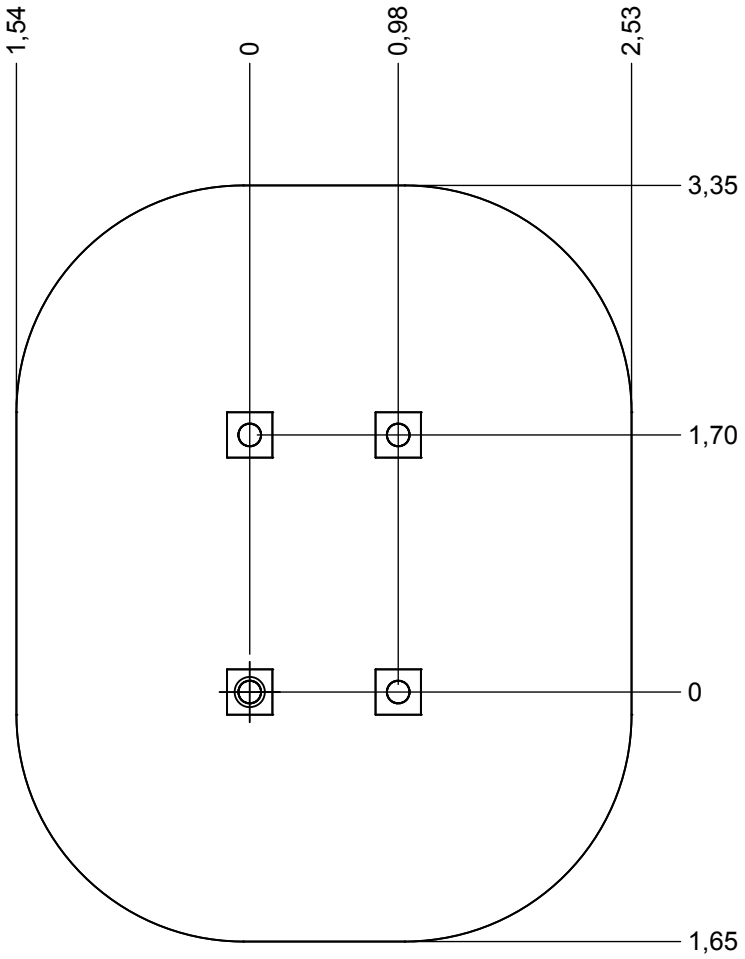

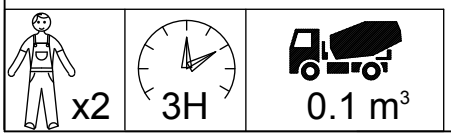

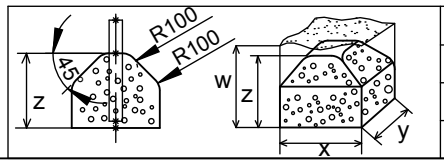

	x	y	z	w
⊡	0.3	0.3	0.3	0.6
⊠	0.4	0.4	0.3	0.6
⊡⊡	0.6	0.3	0.3	0.6

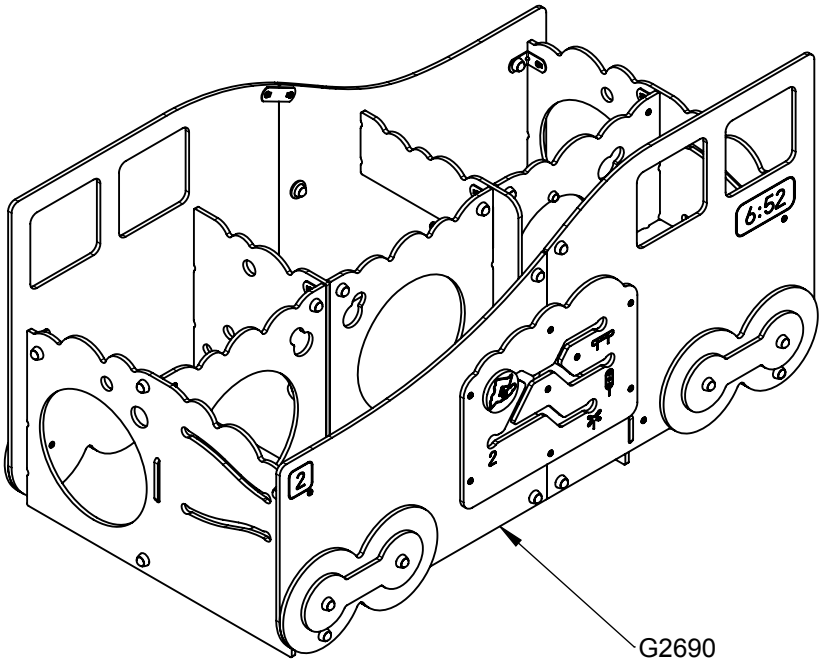

Réf	Qté
G2690	1

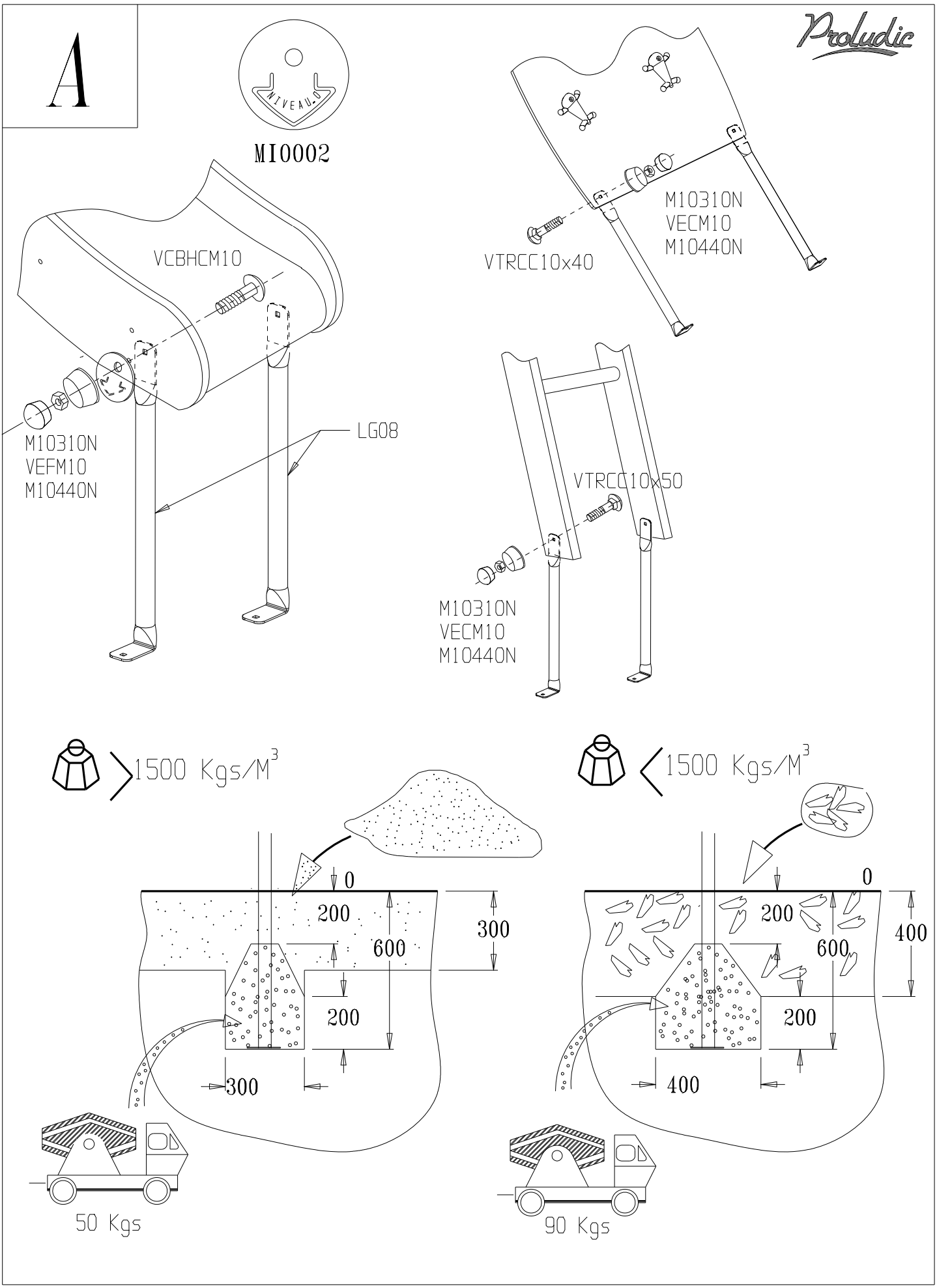
A
Proludic
NIVEAU
MI0002
VCBHCM10
M10310N
VEFM10
M10440N
LG08
M10310N
VECM10
M10440N
VTRCC10x40
VTRCC10x50
M10310N
VECM10
M10440N
1500 Kgs/M3
1500 Kgs/M3
0
200
600
300
200
300
0
200
600
400
200
400
50 Kgs
90 Kgs

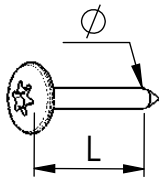

VBT 6 x 30

Ø L (mm)

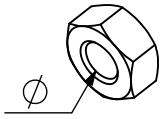

VEC M10

Ø

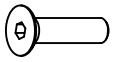

VFHC

VEF

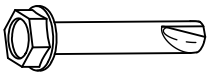

VTHA

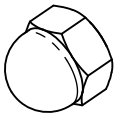

VEB

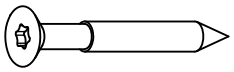

VWT

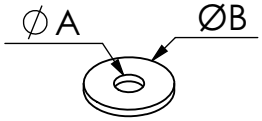

VR6x18

ØA ØB

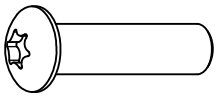

VCBHC

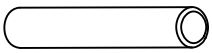

VGC

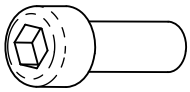

VBTR

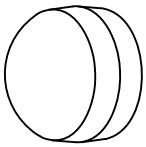

M10 440N

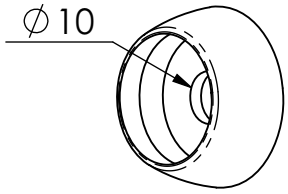

M10 310 N

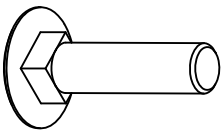

VTRCC

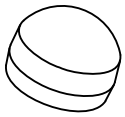

M8440N

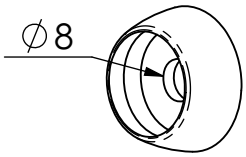

M8310N

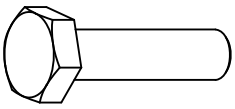

VTH

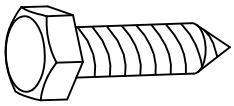

VTF

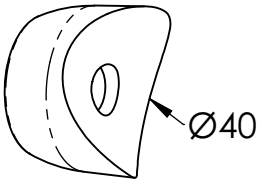

MI2503

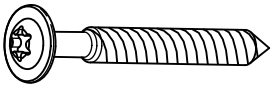

VBT

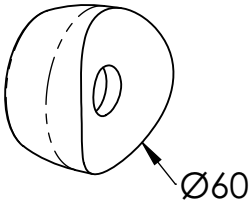

MI2701

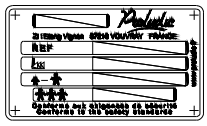

LA000

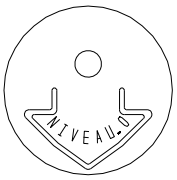

MI0002

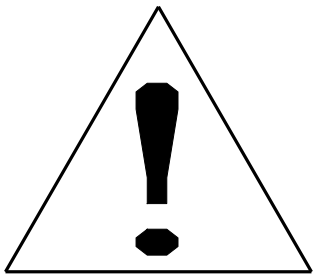

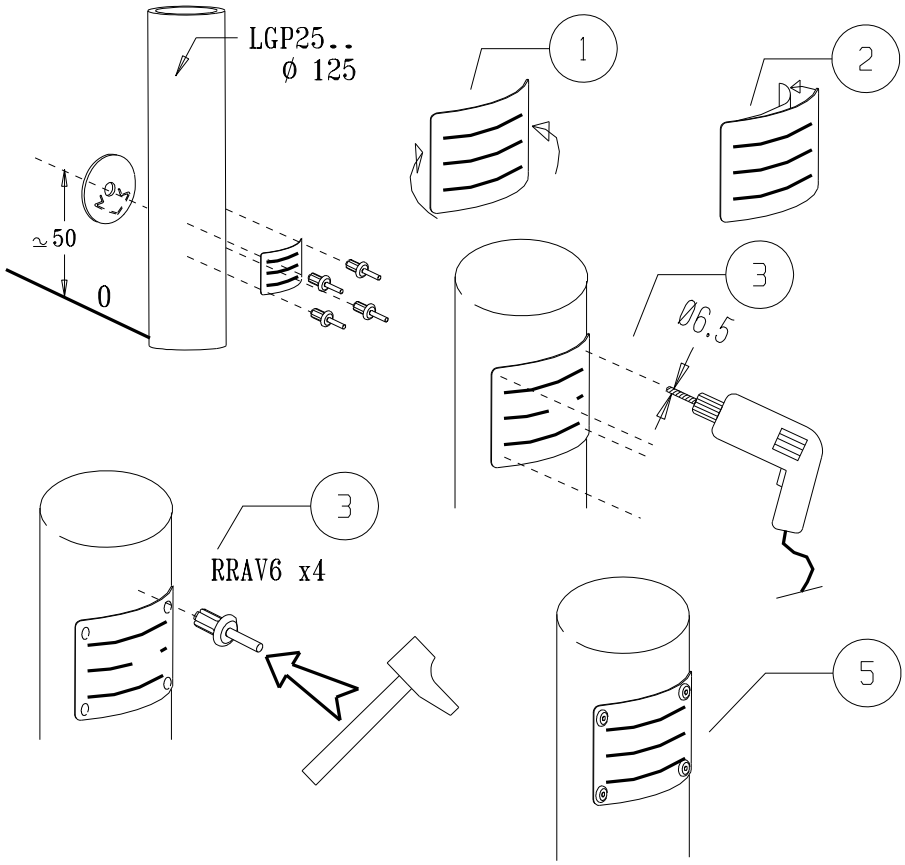

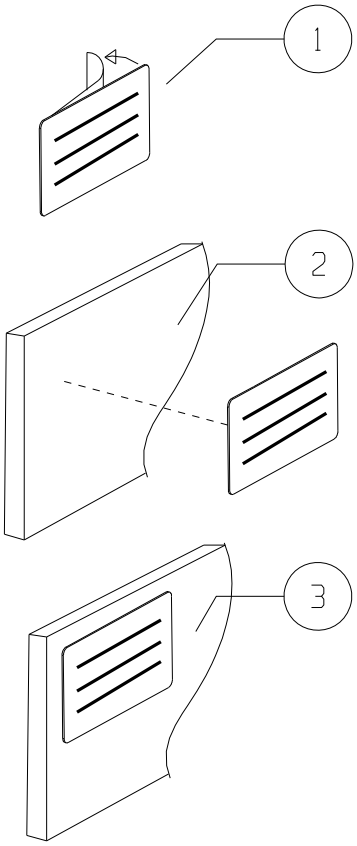

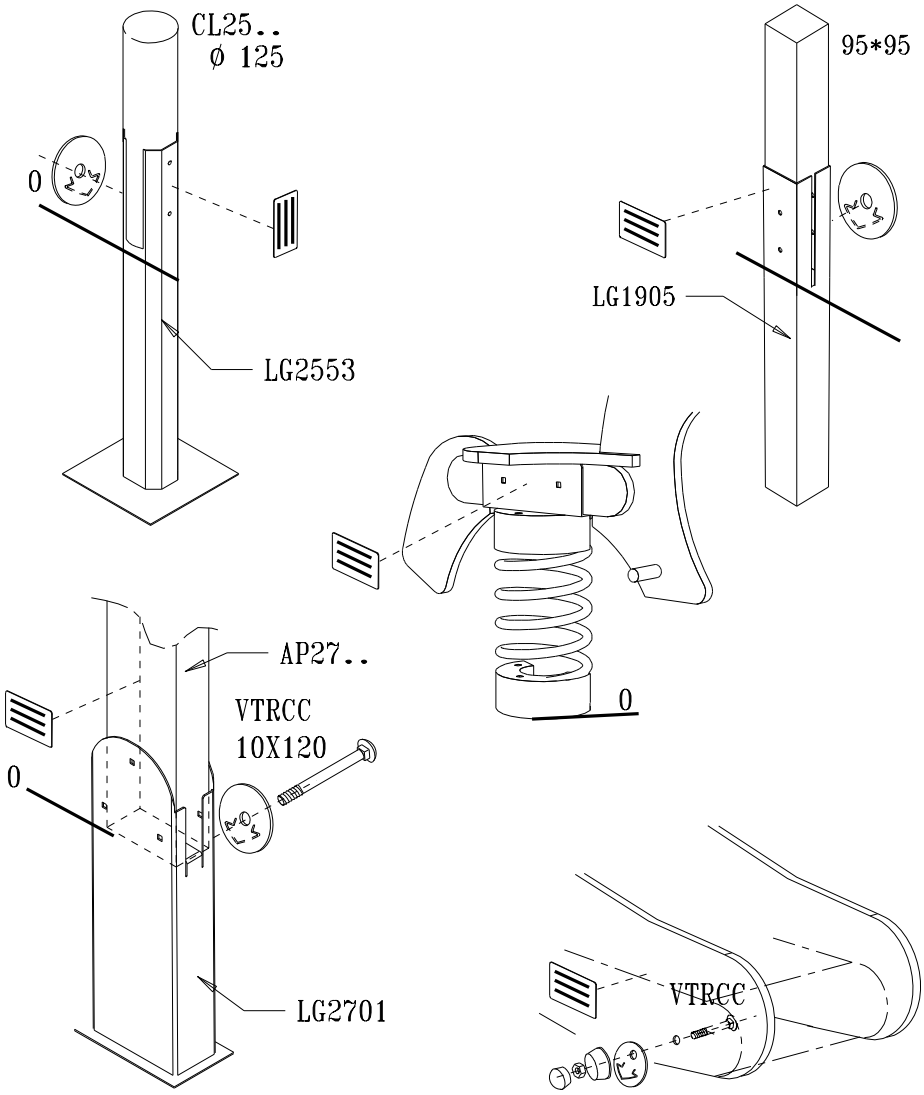

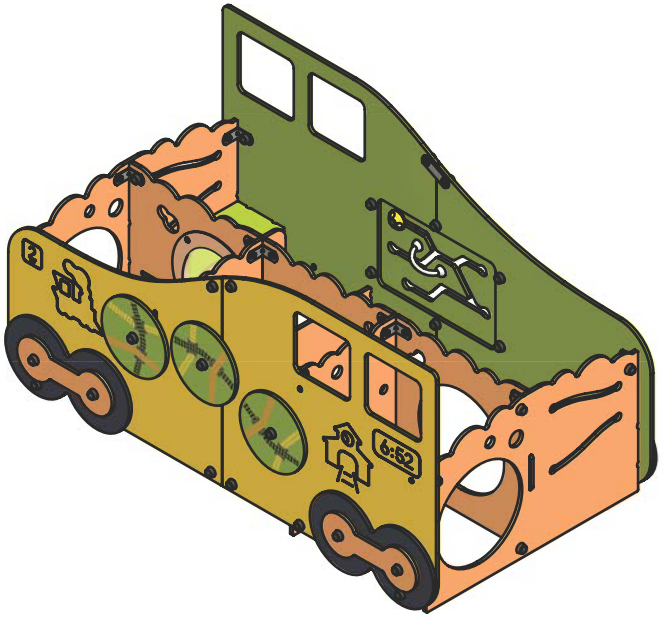

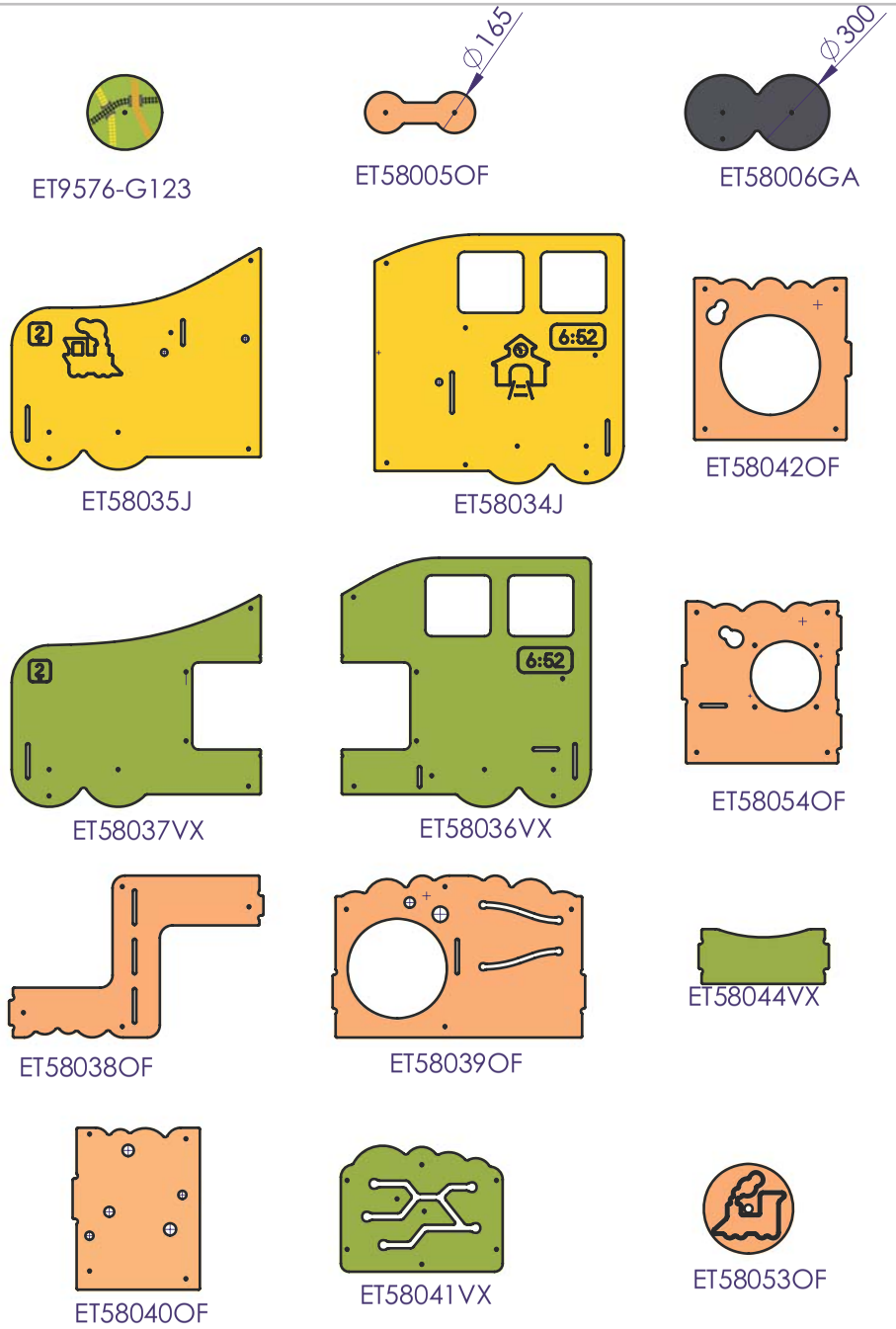

Réf	Qté
ET9576-G123	3
ET58005OF	4
ET58006GA	4
ET58034J	1
ET58035J	1
ET58036VX	1
ET58037VX	1
ET58038OF	1
ET58039OF	2
ET58040OF	1
ET58041VX	1
ET58042OF	2
ET58044VX	1
ET58053OF	1
ET58054OF	1
M4001	1
M10310N	72
M10440N	73
MI323J	1
MI800	1
MI810N	6
MU2614	4
P13	20
P180	4
VCBHCM10x30I	48
VCBHCM10x40I	11
VCBHCM10x50I	9
VCBHCM10x60I	1
VEFM10	70
VTH10x70	3

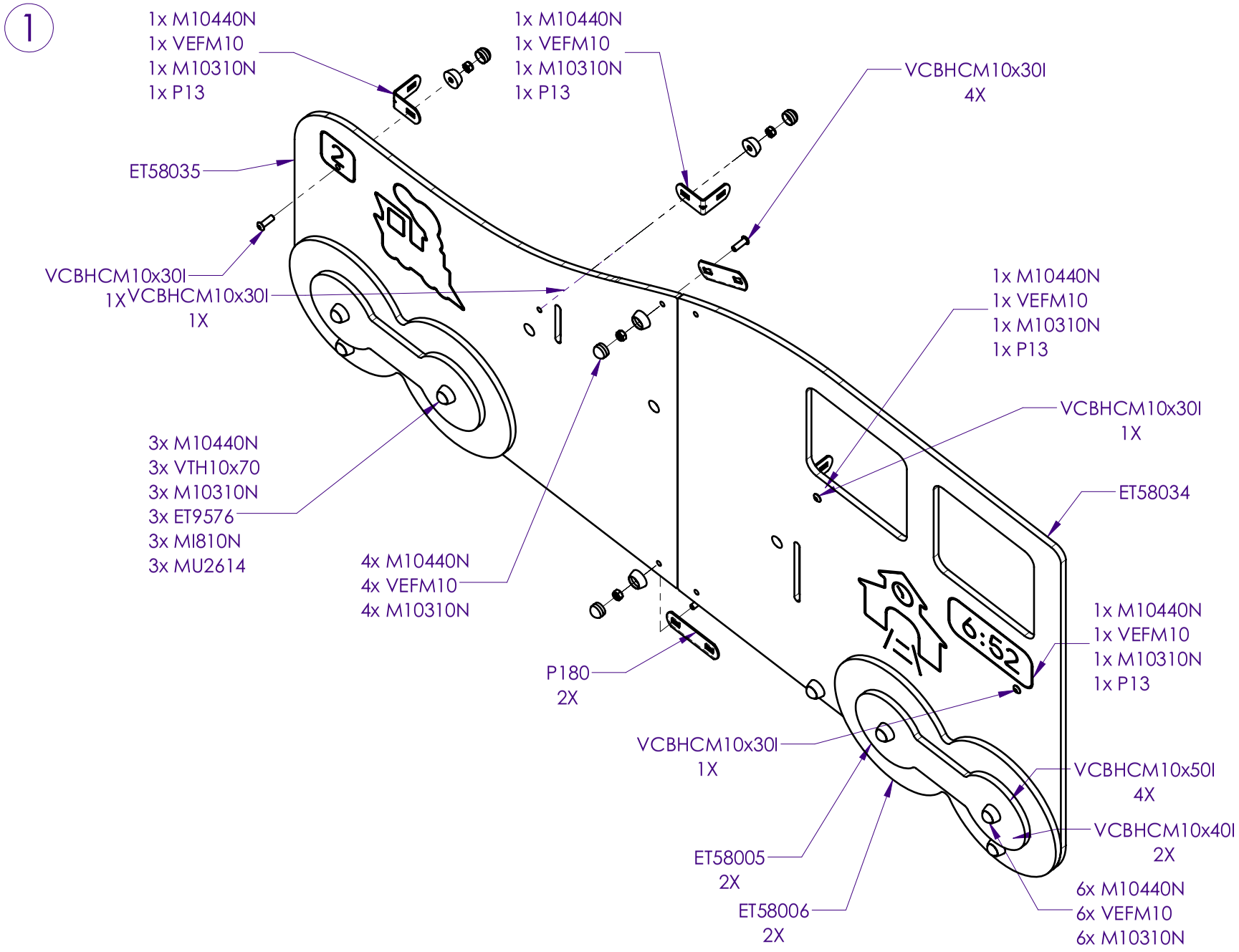
1
1x M10440N
1x VEFM10
1x M10310N
1x P13
1x M10440N
1x VEFM10
1x M10310N
1x P13
VCBHCM10x30I
4X
ET58035
VCBHCM10x30I
1X
VCBHCM10x30I
1X
1x M10440N
1x VEFM10
1x M10310N
1x P13
VCBHCM10x30I
1X
3x M10440N
3x VTH10x70
3x M10310N
3x ET9576
3x MI810N
3x MU2614
ET58034
4x M10440N
4x VEFM10
4x M10310N
1x M10440N
1x VEFM10
1x M10310N
1x P13
P180
2X
VCBHCM10x30I
1X
VCBHCM10x50I
4X
VCBHCM10x40I
2X
ET58005
2X
ET58006
2X
6x M10440N
6x VEFM10
6x M10310N

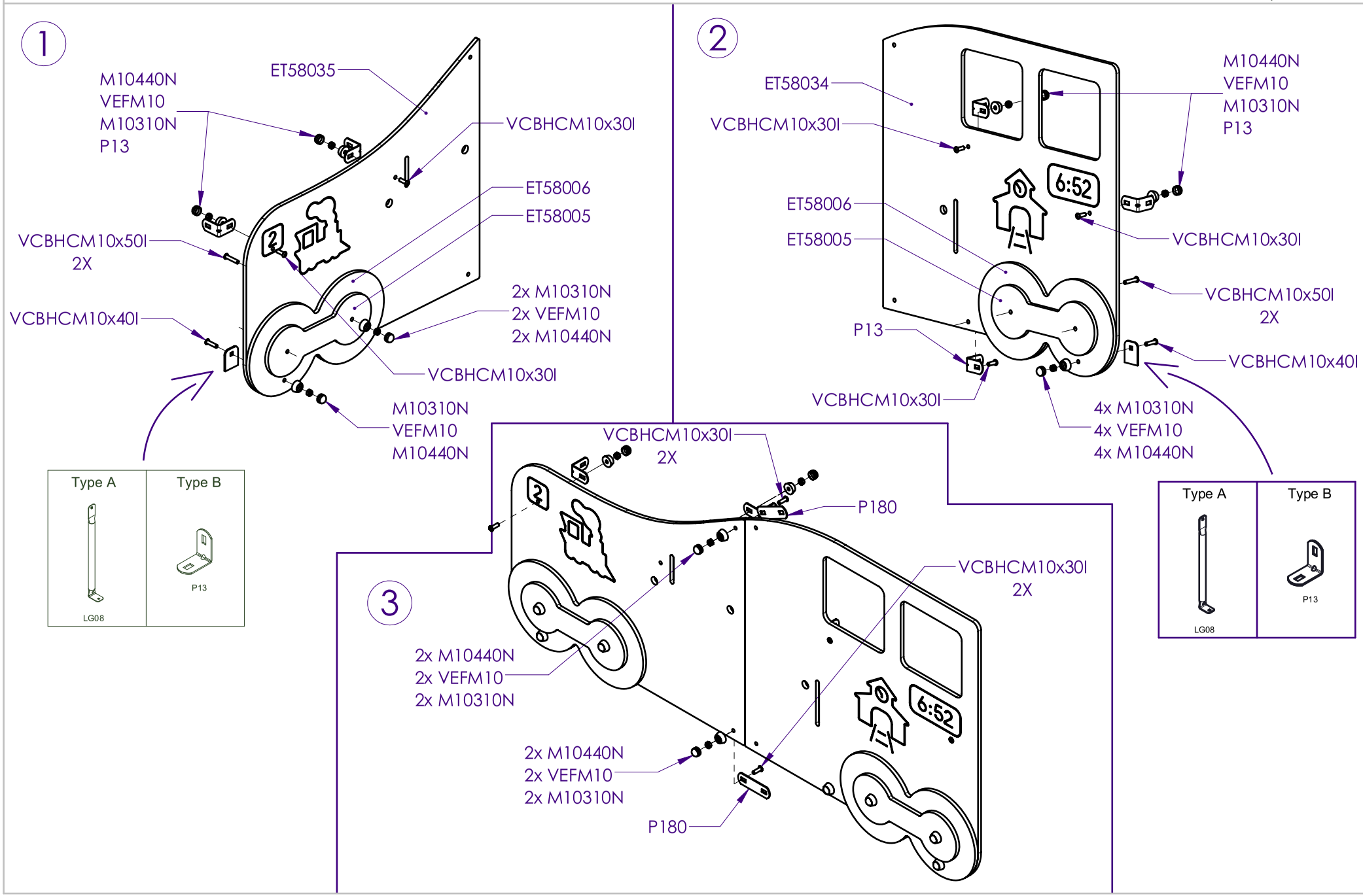
1
M10440N
VEFM10
M10310N
P13
ET58035
VCBHCM10x30I
ET58006
ET58005
VCBHCM10x50I
2X
VCBHCM10x40I
2x M10310N
2x VEFM10
2x M10440N
VCBHCM10x30I
M10310N
VEFM10
M10440N
Type A
Type B
LG08
P13
2
ET58034
VCBHCM10x30I
M10440N
VEFM10
M10310N
P13
6:52
ET58006
ET58005
VCBHCM10x30I
VCBHCM10x50I
2X
P13
VCBHCM10x40I
VCBHCM10x30I
4x M10310N
4x VEFM10
4x M10440N
Type A
Type B
LG08
P13
3
VCBHCM10x30I
2X
P180
VCBHCM10x30I
2X
2x M10440N
2x VEFM10
2x M10310N
6:52
2x M10440N
2x VEFM10
2x M10310N
P180

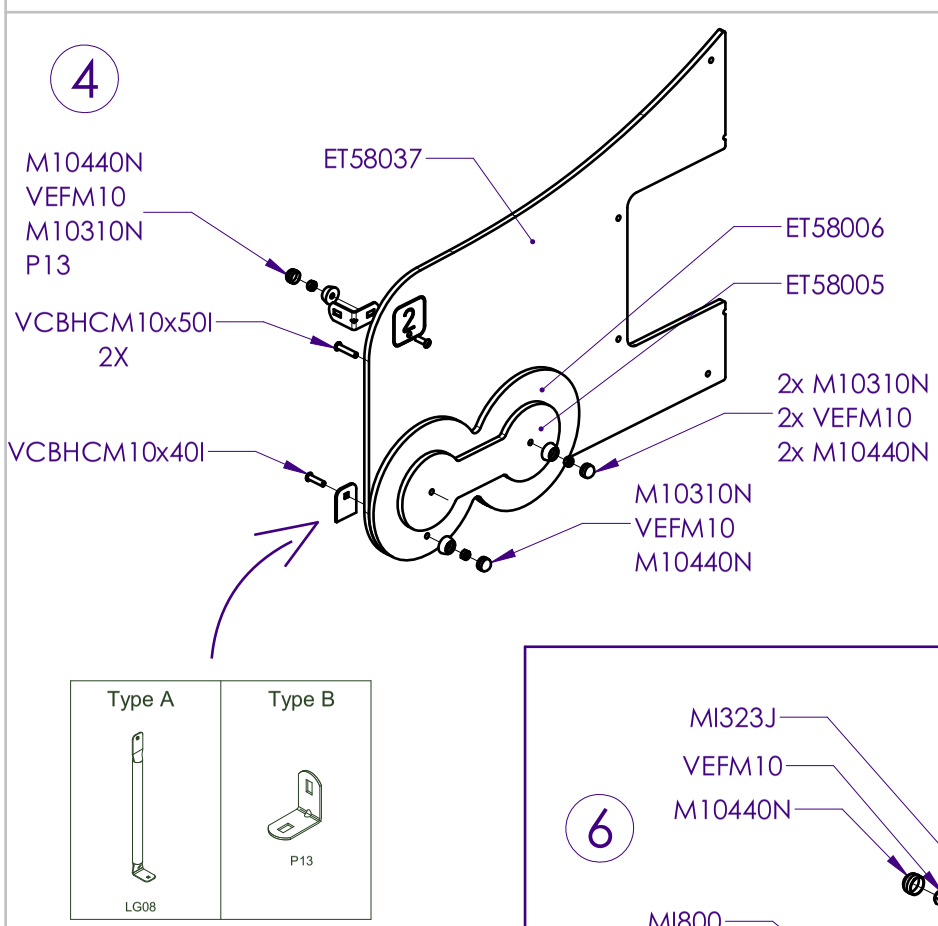
4
M10440N
VEFM10
M10310N
P13
ET58037
ET58006
ET58005
VCBHCM10x50I
2X
2x M10310N
2x VEFM10
2x M10440N
VCBHCM10x40I
M10310N
VEFM10
M10440N
Type A
Type B
LG08
P13

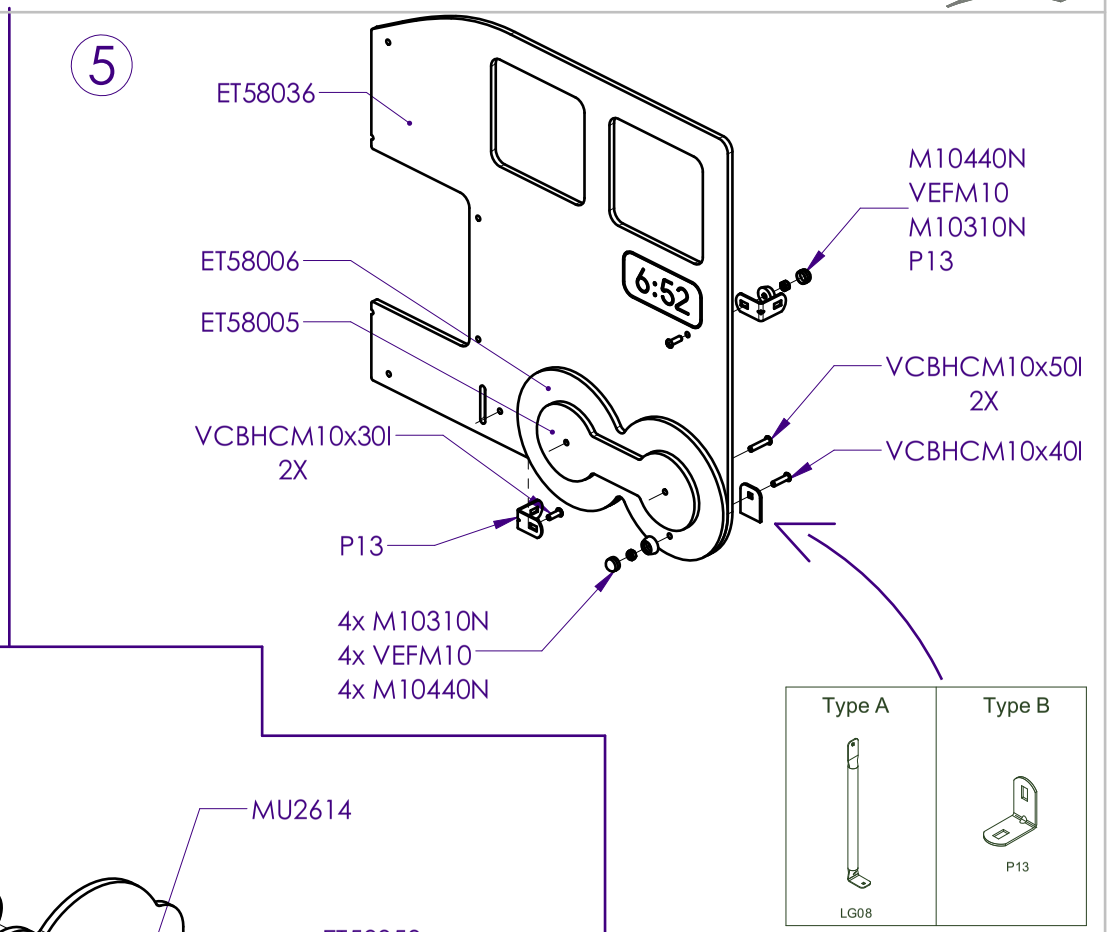
5
ET58036
M10440N
VEFM10
M10310N
P13
ET58006
ET58005
6:52
VCBHCM10x50I
2X
VCBHCM10x30I
2X
VCBHCM10x40I
P13
4x M10310N
4x VEFM10
4x M10440N
Type A
Type B
LG08
P13

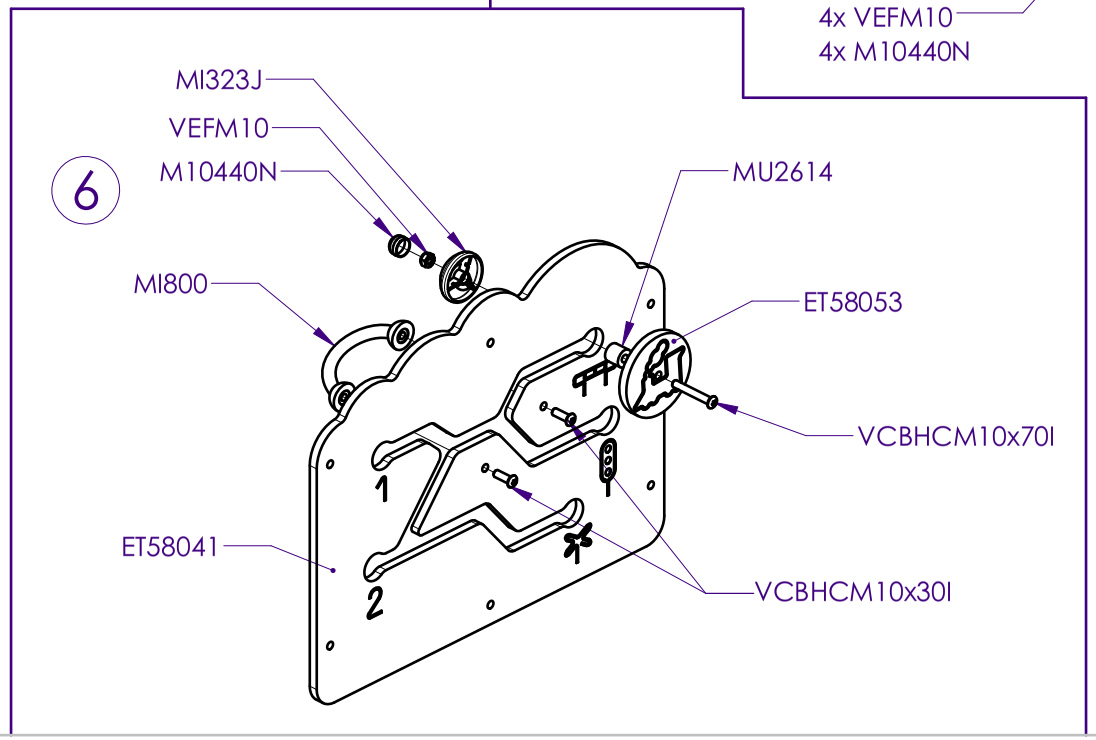
6
MI323J
VEFM10
M10440N
MU2614
MI800
ET58053
VCBHCM10x70I
1
2
ET58041
VCBHCM10x30I

7

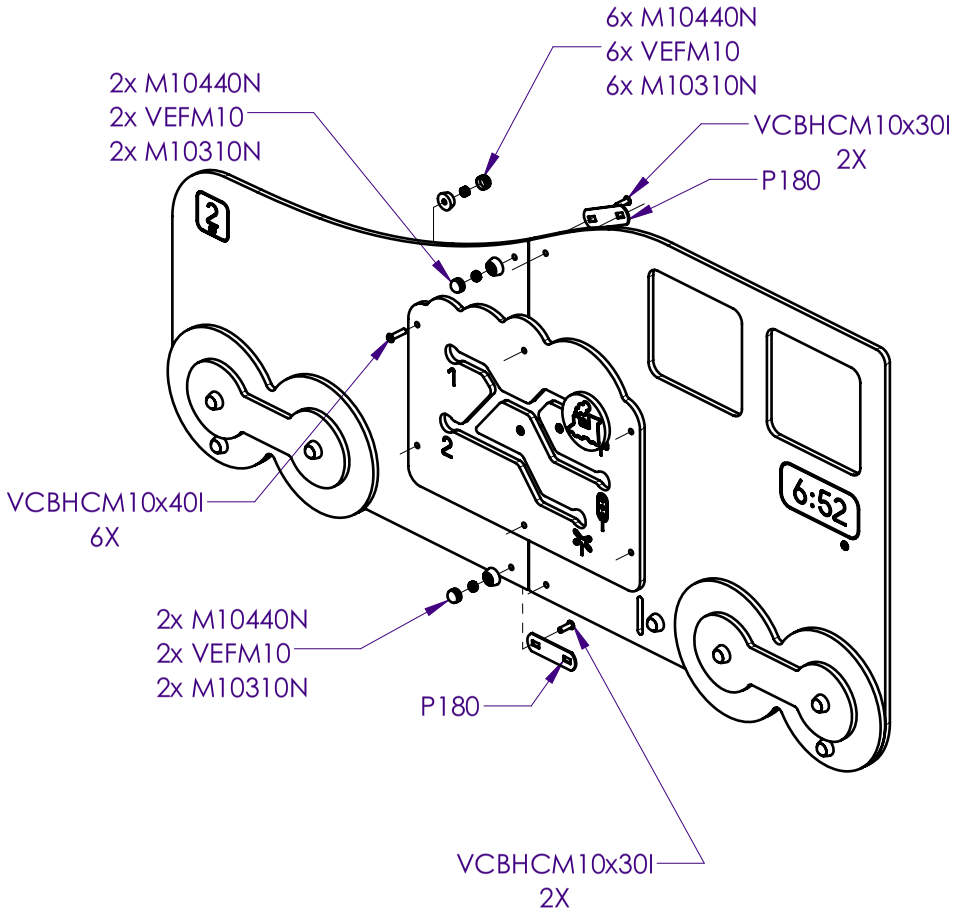
6x M10440N
6x VEFM10
6x M10310N
2x M10440N
2x VEFM10
2x M10310N
VCBHCM10x30I
2X
P180
VCBHCM10x40I
6X
2x M10440N
2x VEFM10
2x M10310N
P180
VCBHCM10x30I
2X
6:52

8

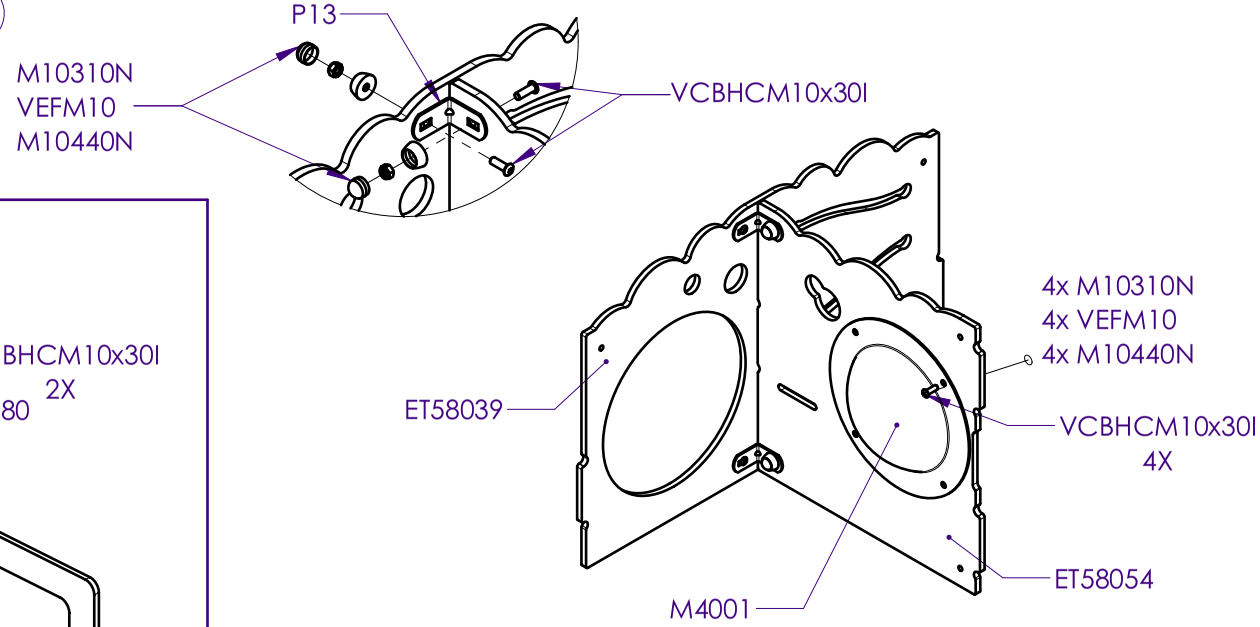
P13
M10310N
VEFM10
M10440N
VCBHCM10x30I
4x M10310N
4x VEFM10
4x M10440N
ET58039
VCBHCM10x30I
4X
ET58054
M4001

9

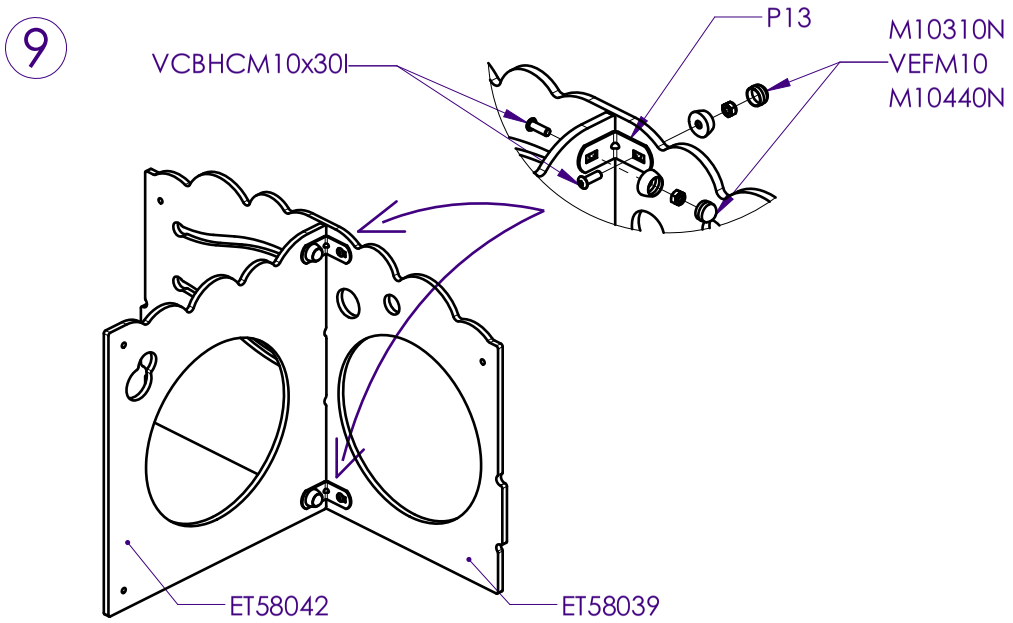
P13
M10310N
VEFM10
M10440N
VCBHCM10x30I
ET58042
ET58039

10

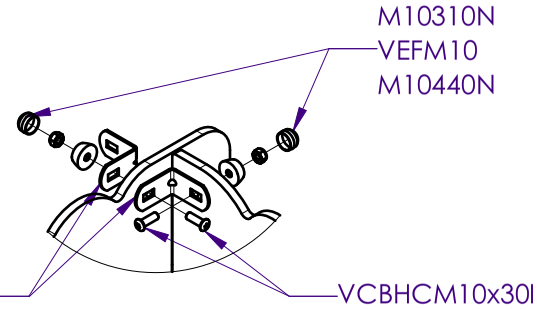
M10310N
VEFM10
M10440N
P13
VCBHCM10x30l

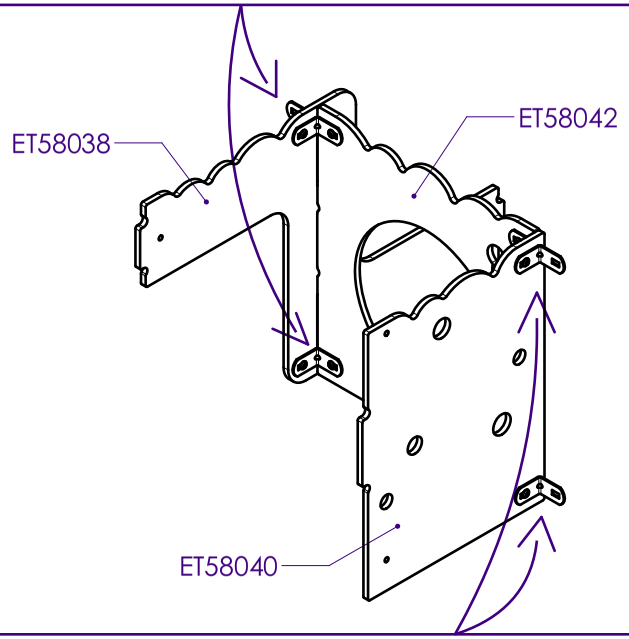
ET58038
ET58042
ET58040

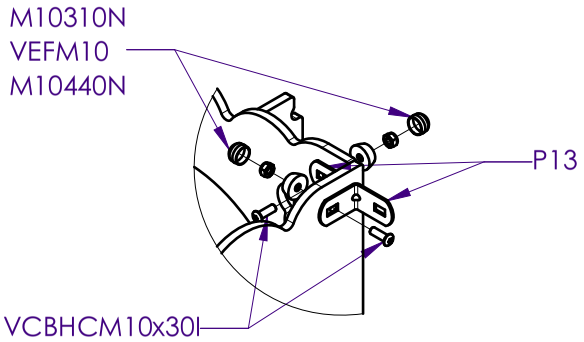
M10310N
VEFM10
M10440N
P13
VCBHCM10x30l

11

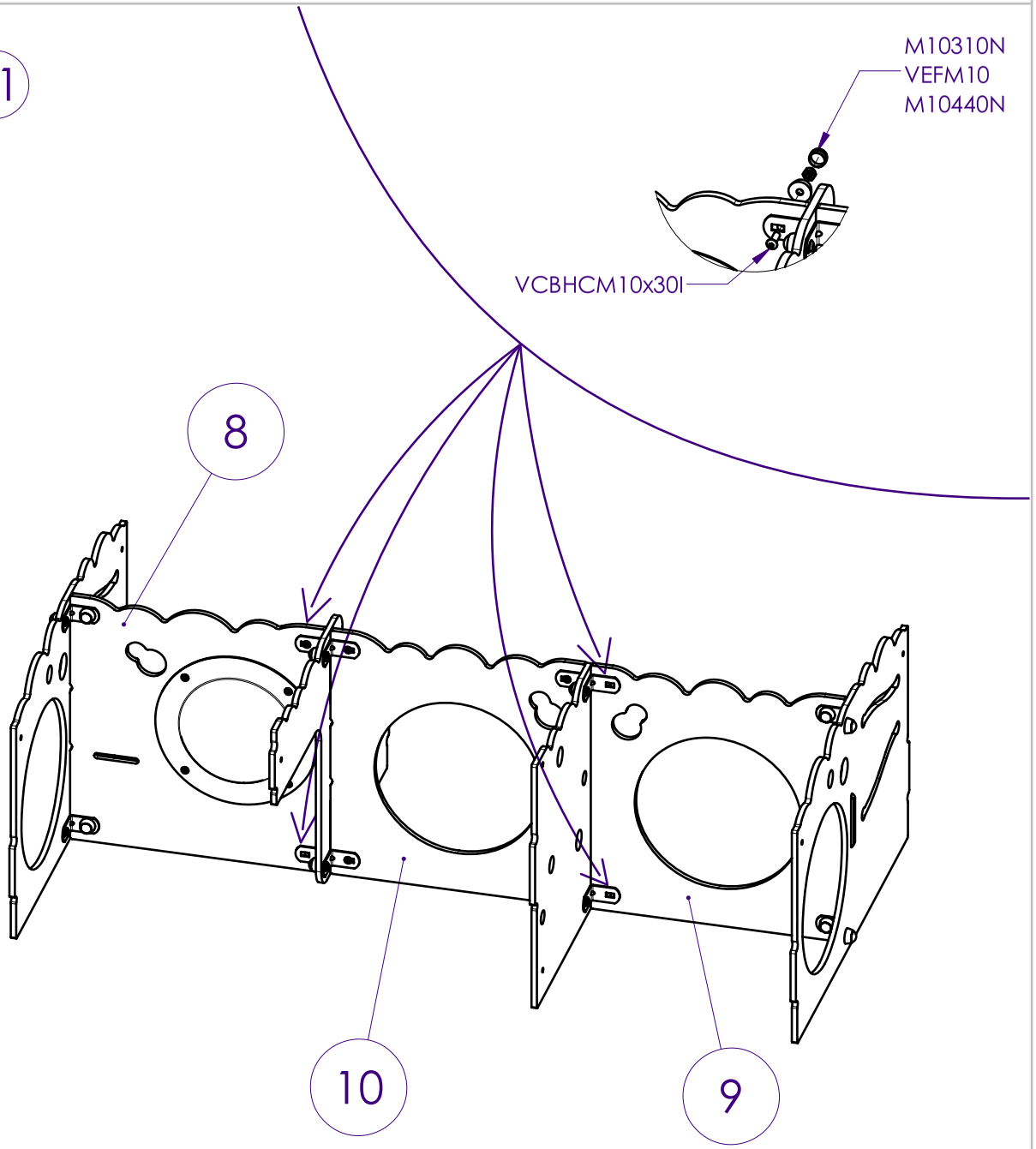
M10310N
VEFM10
M10440N
VCBHCM10x30l
8
10
9

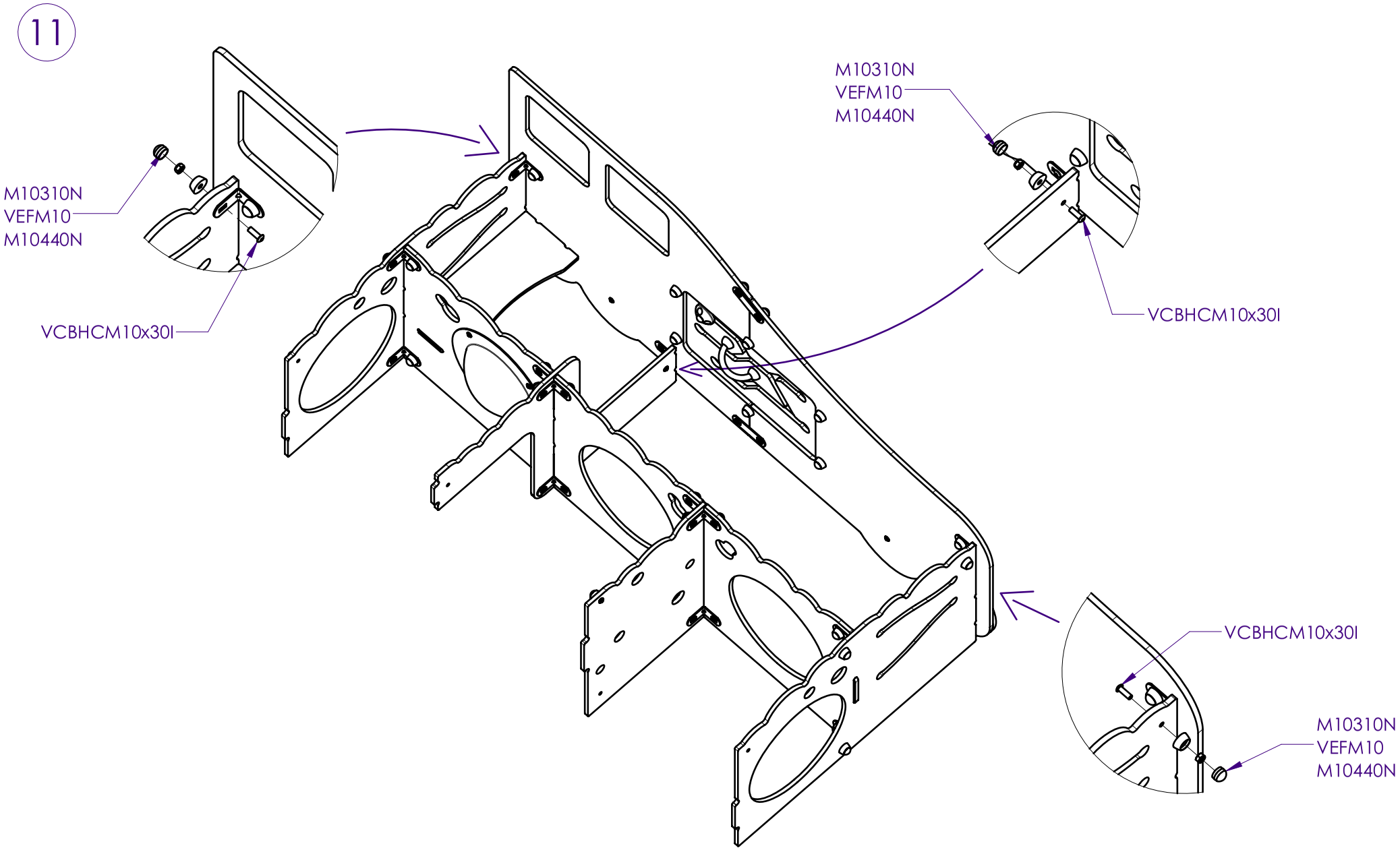
11
M10310N
VEFM10
M10440N
VCBHCM10x30l
M10310N
VEFM10
M10440N
VCBHCM10x30l
VCBHCM10x30l
M10310N
VEFM10
M10440N

12

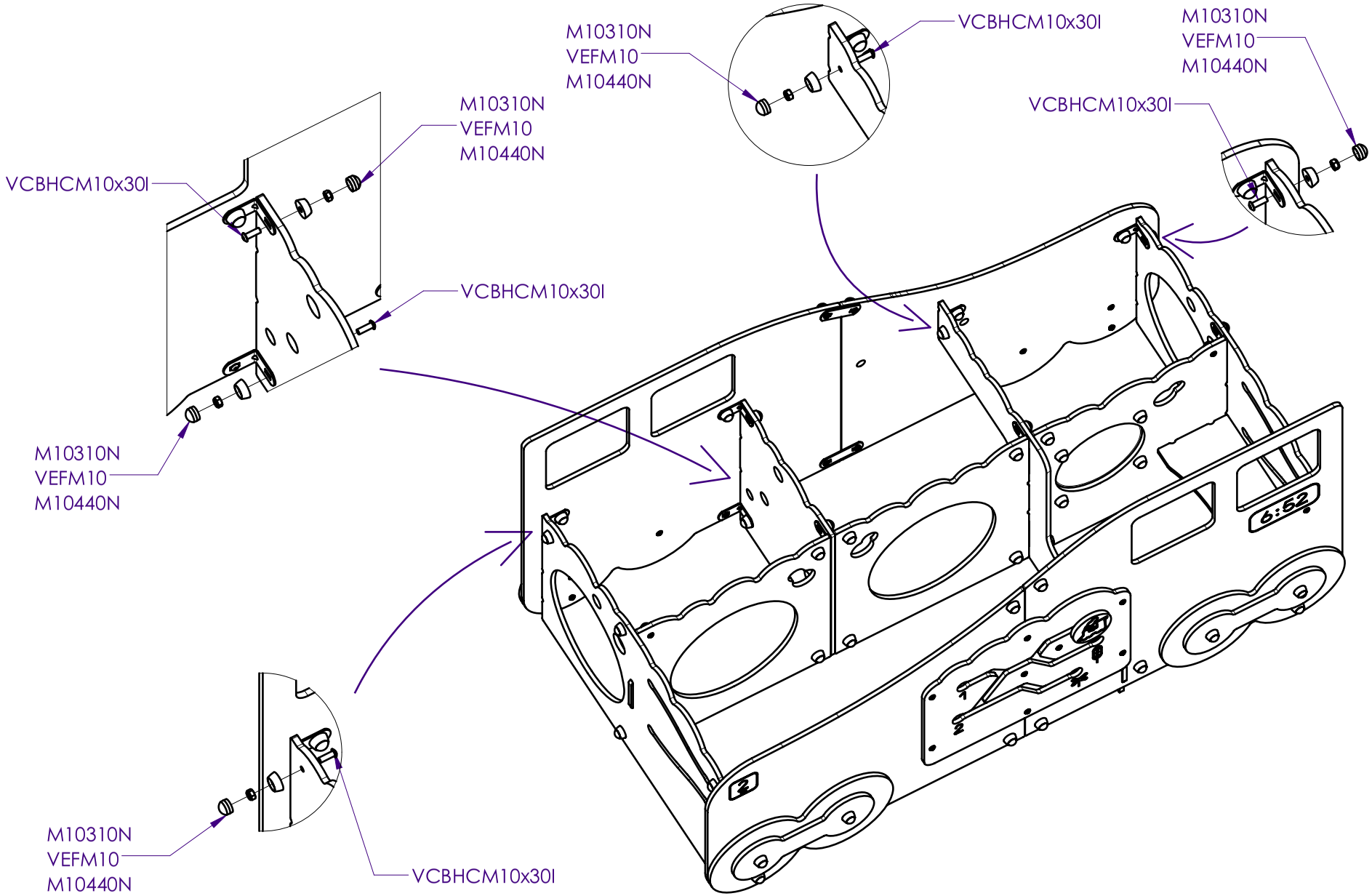
M10310N
VEFM10
M10440N
VCBHCM10x30I
M10310N
VEFM10
M10440N
VCBHCM10x30I
M10310N
VEFM10
M10440N
VCBHCM10x30I
VCBHCM10x30I
M10310N
VEFM10
M10440N
M10310N
VEFM10
M10440N
VCBHCM10x30I
6:52

13

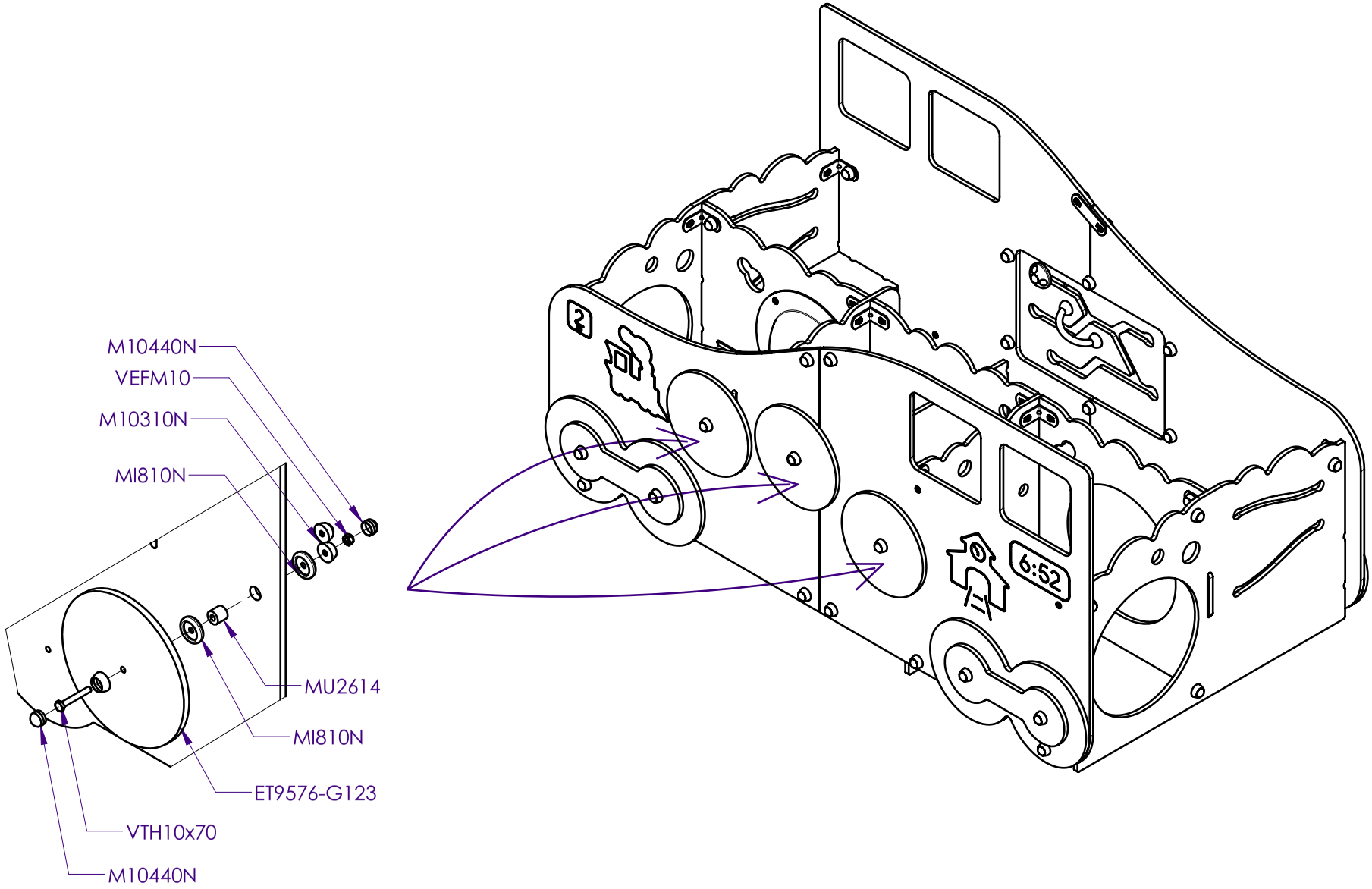
M10440N
VEFM10
M10310N
MI810N
MU2614
MI810N
ET9576-G123
VTH10x70
M10440N
6:52